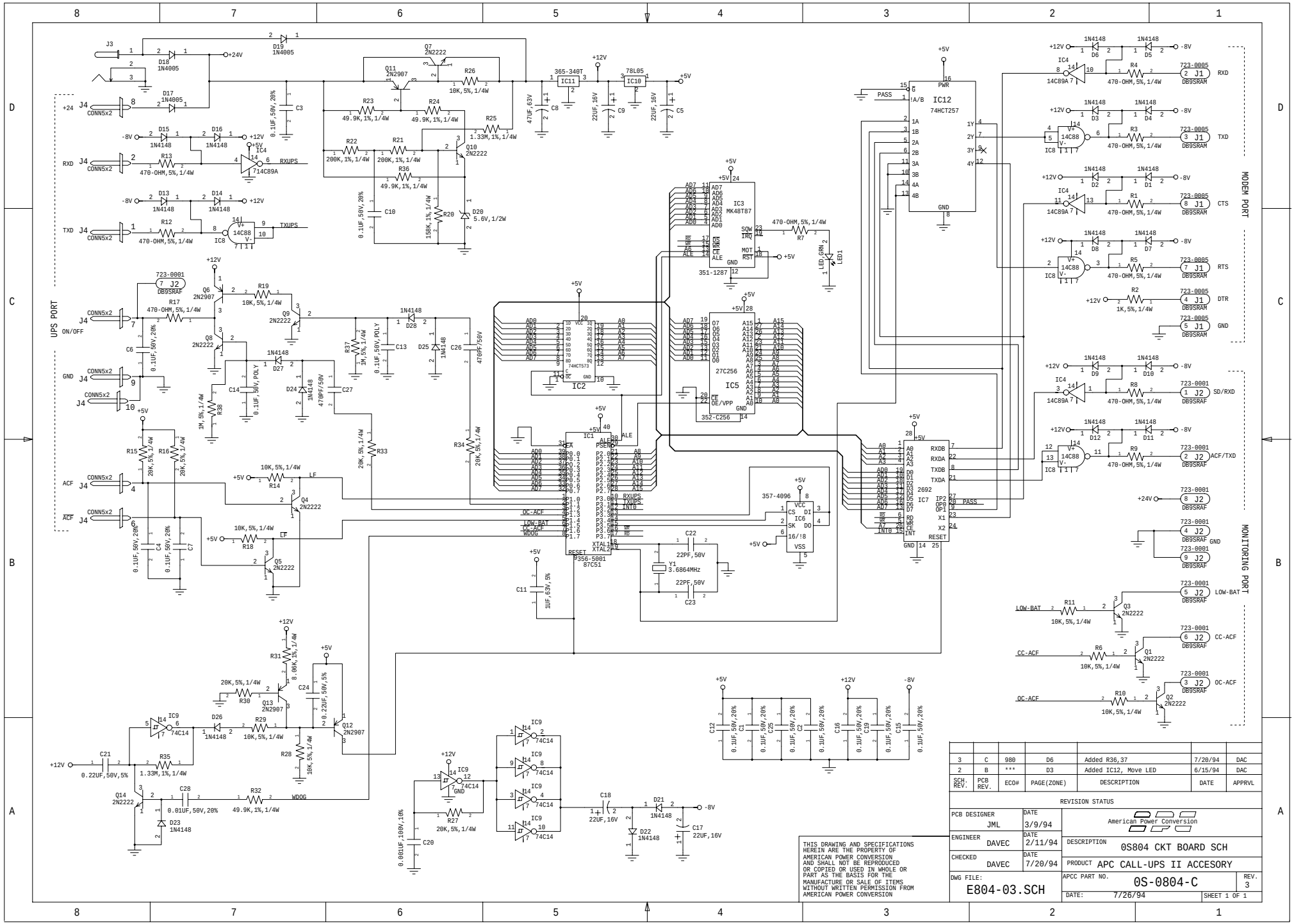

THIS DRAWING AND SPECIFICATIONS HEREIN ARE THE PROPERTY OF AMERICAN POWER CONVERSION AND SHALL NOT BE REPRODUCED OR COPIED OR USED IN WHOLE OR PART AS THE BASIS FOR THE MANUFACTURE OR SALE OF ITEMS WITHOUT WRITTEN PERMISSION FROM AMERICAN POWER CONVERSION

SCH. REV.	PCB REV.	ECO#	PAGE(ZONE)	DESCRIPTION	DATE	APPRVL
3	C	980	D6	Added R36,37	7/20/94	DAC
2	B	***	D3	Added IC12, Move LED	6/15/94	DAC

REVISION STATUS

PCB DESIGNER: JML	DATE: 3/9/94	American Power Conversion
ENGINEER: DAVEC	DATE: 2/11/94	DESCRIPTION: 0S804 CKT BOARD SCH
CHECKED: DAVEC	DATE: 7/20/94	PRODUCT: APC CALL-UPS II ACCESORY
DWG FILE: E804-03.SCH		APCC PART NO.: 0S-0804-C — REV.: 3
		DATE: 7/26/94 — SHEET 1 OF 1